MANUAL / SERVICE MANUAL

Hot drink dispenser with 1 beverage line

Geyser



Written by: PJSC UKSNAB
31-C, Zaliznychna Street,
62301, Dergachi
Kharkiv, Ukraine

Published by: UBC Group
www.beer-co.eu

Content

1. Danger warnings 3
2. Safety instructions 3
GENERAL INSTRUCTIONS 3
INTERRUPTION OF OPERATION 3
3. Safety functions 4
4. Technical specifications 5
5. Thermostat Settings 7
6. Installation 9
7. Commissioning 9
8. Decommissioning 9
9. Troubleshooting 12
10. Connection 13
CONNECTION WITH ELECTRIC PUMPS 13
11. Spare Parts 14
ORDERING SPARE PARTS 14
SPARE PARTS 15
Appendix A: Electrical Diagram (Type E+F (CEE 7/7)) 16
Appendix b: Electrical Diagram (BS 1363) 17

PRODUCTS COVERED

This manual is valid for the hot drinks dispenser Geyser



1. DANGER WARNINGS

Maximum appliance safety is one of the product features to which we pay particular attention.

However, despite all the precautions taken, every appliance still carries potential dangers if it is not handled correctly.

For your safety, we have therefore summarised the following danger warnings.

Important information for your safety that you should follow	• The machine may only be connected and commissioned by Customer Service. • Maintenance and repair work may only be carried out by Customer Service using original spare parts. • The integrated safety devices must not be modified under any circumstances. • Caution. Danger of scalding! There is a scalding hazard in the mulled wine dispensing area. • Caution. Danger to health! When handling detergents, observe the safety precautions on the detergent packaging. During cleaning, cleaning liquid leaks out of the mulled wine spout.
	

2. SAFETY INSTRUCTIONS

GENERAL INSTRUCTIONS

Maintenance work on the mulled wine appliance must only be carried out by qualified service personnel.

INTERRUPTION OF OPERATION

1) If the machine is to be switched off for a long period of time, a basic cleaning is necessary beforehand. If there is a risk of freezing, the machine should be emptied beforehand to prevent frost damage.

2) After a break in operation of several weeks, we recommend that you clean the machine before restarting it.

Precautions against further damage to the machine

In principle, every technical device poses a danger during operation, especially if used unattended.

Any claims against the manufacturer or the service department for such indirect damage that originates outside the device are excluded, unless liability is mandatory by law.

We therefore recommend that the user take appropriate measures to prevent damage in accordance with the local operating conditions.

3. SAFETY FUNCTIONS

The Geyser is protected against overheating. If the unit temperature reaches 95°C, the power supply is switched off. The appliance is only ready for use again after manual activation of the overheat protection.

Approvals

- The equipment is manufactured according to legal demands and CE approval.
- Approvals will appear from the labels attached to the name plate.

4. TECHNICAL SPECIFICATIONS

Capacity:	2700 W
Dimensions, mm Width Height Depth Depth (with drip tray):	 212 486 398 540
Connection voltage:	220-240 V 50 Hz
Power	12 A
Connected load:	Type E+F (CEE 7/7)/ BS 1363
Temperature range for serving drinks	30°C-85°C
Ready to draw after switch on	approx. 5 minutes
Safety sensor:	95°C
Flow rate:	30 l/h
Weight Empty:	21 kg
Product coils: Material: Diameter: Quantity	 316 stainless steel 5/16” O.D. 1 coil

Application.

Geyser hot drinks appliances are used in the catering industry and at outdoor events. The Geyser hot beverage dispensers are the ideal solution for the easy and clean heating of mulled wine and similar beverages.

The liquids to be heated must have a viscosity of no more than 4 Pa x s at the time of feeding into the hot drinks machine.

The particle size must not exceed 0.5 mm.

The hot beverage dispenser is only approved for the above-mentioned applications and is therefore not suitable for heating liquids containing strong alcohol, chemicals or similar substances.

5. THERMOSTAT SETTINGS

Manual for Menu settings on Eliwell electronic thermostat

To change the differential, follow the steps below.

	Button	Description
	HOLD SET 5 sec	Press and hold the SET button for 5 seconds to open the menu.
	PRESS SET	The first parameter will be the *Dif* folder. To enter it, press the SET button.
	PRESS OR	To change the **Dif** parameter, use the arrow buttons.
	PRESS SET	To activate the selected parameters, press the **Set** button.
	PRESS	To return to the main screen, press the **button**.

Manual for Menu settings on Eliwell electronic thermostat

To change the setpoint, follow the steps below.

	Button	Description
	PRESS SET	Press the **Set** button.
	PRESS SET	To confirm the selection, press the **Set** button again.
	PRESS ∧ OR ∨	To change the **Set** parameter, use the arrow buttons.
	PRESS SET	To confirm the selection, press the **Set** button again.
	PRESS ⏻	To return to the main screen, press the **button**. ⏻

6. INSTALLATION

Preparation for installation

The mulled wine supply line (3/8") and the power connection must be connected directly to the dispenser.

These on-site preparations must be ordered by the machine operator and must be carried out by licensed installers of filling systems in accordance with national and local regulations. Access openings and openings in counters or storage plates for the machines must be designed in such a way that no live parts can be touched.

Setting up the appliance

To ensure proper functioning, the mulled wine warmer must be installed on a level surface.

Make sure that there is sufficient space to connect the beverage lines.

The installation location should be chosen in such a way that the devices are protected from moisture.

Also make sure that the connection cable is not kinked or pinched on its way to the socket. The power plug must always be easily accessible.

7. COMMISSIONING

1. Connect the beverage lines and check for leaks.
2. Connect the appliance to the mains.
3. Switch on the appliance and set the desired temperature.

When setting the temperature, please note that setting the dispensing temperature too high can cause the water to splash out of the tap.

Danger of scalding!



Caution. There is a risk of scalding at the beverage dispensing points in the dispensing area. Empty beverage containers may splash.

The maximum dispensing temperature depends on the alcohol content of the beverage and the altitude!

When the operating temperature is reached, the appliance is ready for use (heating switches off, green light goes out).

8. DECOMMISSIONING

1) Switch off the appliance
2) Pull the power plug out of the socket
3) Open the taps until the pressure is equalised
4) Disconnect the beverage supply lines

8. CLEANING

Hygiene in every catering establishment consists of food hygiene, operational hygiene and staff hygiene. Only when these components work together seamlessly can the goal of perfect, clean and high-quality products be achieved.

To achieve sufficient cleanliness and sterility when cleaning a Geyser beverage heater, only a chemical cleaning method is effective. A water-only process does not eliminate germs.

Chemical/mechanical cleaning may only be carried out by UBC

Before starting sanitization, the heating elements must be turned off!

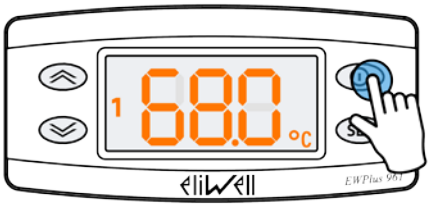	HOLD  5 sec	Press and hold the button  for 5 seconds to turn off the heating elements.

Frequency of cleaning and disinfection

- Immediately before first commissioning
- Immediately before and after a one-week break in operation
- Immediately after changing the type of beverage
- Once a day for parts that come into contact with the beverage and air (e.g. part of the dosing valve/spout, drip tray)
- Put into operation after 7-14 days at the latest

Tap spouts

The spouts are rinsed with water using a cleaning ball. This prevents the foam and beverage residues from drying out and keeps the ventilation holes in the taps clean and functional. This measure deprives insects, for example, of a source of food and thus prevents the spread of unwanted contamination.

Rinsing is recommended at the end of work and before and after long breaks in dispensing.




The cleaning ball should be checked regularly for internal contamination.

Beverage dispensing lines

The version of the appliance with a beverage pump may only be cleaned chemically! Mix the cleaning agent according to the manufacturer's instructions and allow it to be sucked up by the pumps as for the dispensing process. Follow the manufacturer's instructions.

After cleaning, flush the system with potable water (minimum 5 litres per line) until the cleaning agent is completely removed. If possible, this should be checked with appropriate tests (e.g. pH indicator test strips).

Power supply.

Before cleaning the appliance, unplug it from the mains!

Do not allow the appliance to come into direct contact with water, but clean it only with a damp cloth and a little detergent.

Requirements for detergents and disinfectants

Detergents and disinfectants must not affect the surfaces of the components and pipes.

Use only suitable alkaline cleaning agents, do not use chlorine-containing agents (if possible, with an SK mark or certificate of conformity).

Clean the beverage dispensers and lines in accordance with the applicable cleaning regulations (DIN 6650-6)

9. TROUBLESHOOTING

Problem	Possible cause	Troubleshooting
The device does not switch on	No network connection	Establish a network connection
	The device is switched off	Switch on the device
	Overheating protection has been activated	Switch on the overheating protection
Indicator lamp does not light up	The fuse has tripped	Check fuses and mains connection
	The lamp is defective	Replace the lamp*.
	Defective thermostat	Replace the thermostat
Low beverage temperature	The fuse has tripped	Check the fuses and mains connection*.
	The temperature is set too low	Set a higher temperature
	Flow rate is too high	test, max. dosage of 0.2 litres in 5-6 seconds
Flow rate is too low	The beverage line is kinked, stuck or blocked.	Check the beverage supply line
Lack of beverage flow	The flow regulator on the tap is screwed in too tightly	Loosen the regulator on the tap
	Defective power supply unit	Replace the power supply*.
	Electric pump defect	Replace the electric pump

10. CONNECTION

CONNECTION WITH ELECTRIC PUMPS

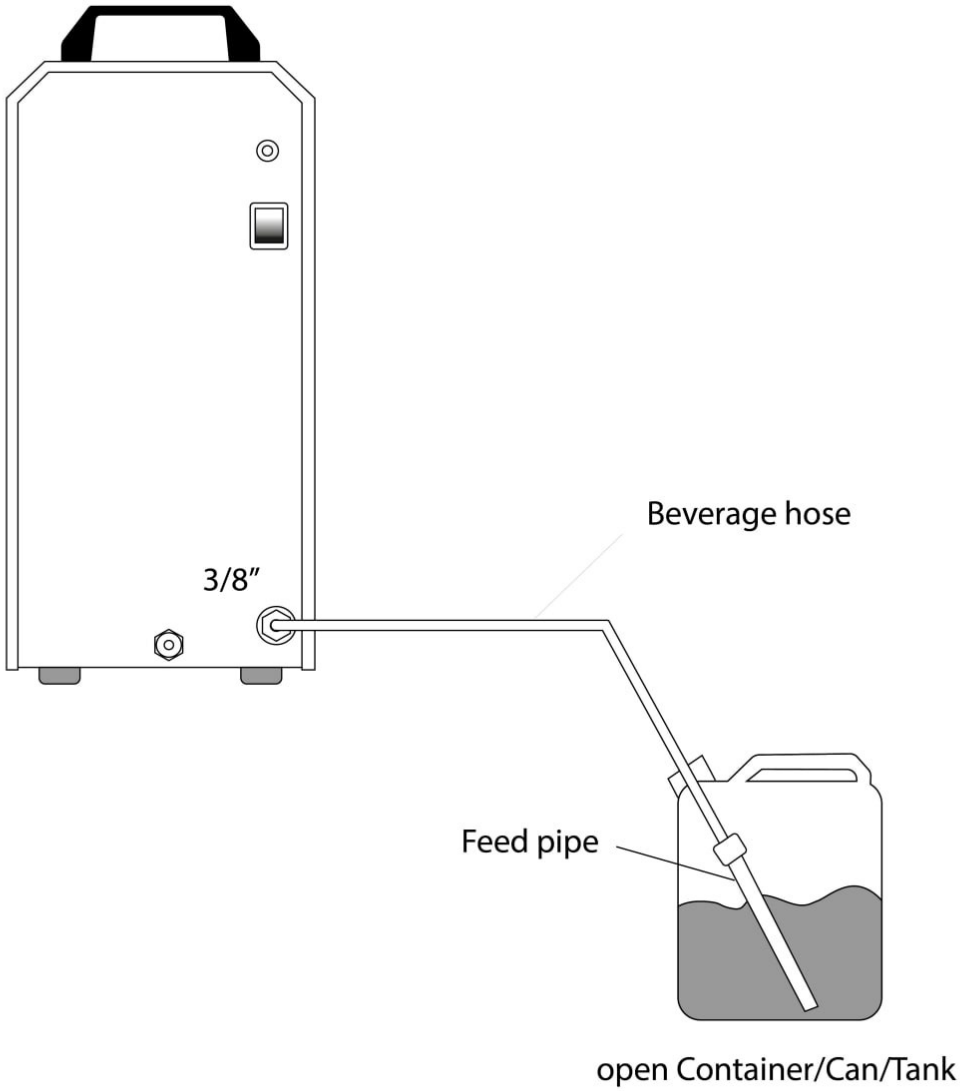

11. SPARE PARTS

ORDERING SPARE PARTS

When ordering a spare part please refer to the spare part drawing and look up the specific spare part number.

Please state carefully the spare part number, the specification and quantity wanted before you send your order.

If, though, a certain part is not specified in this section, do not hesitate to contact us for further information.

The drawing shows the standard dispenser contents

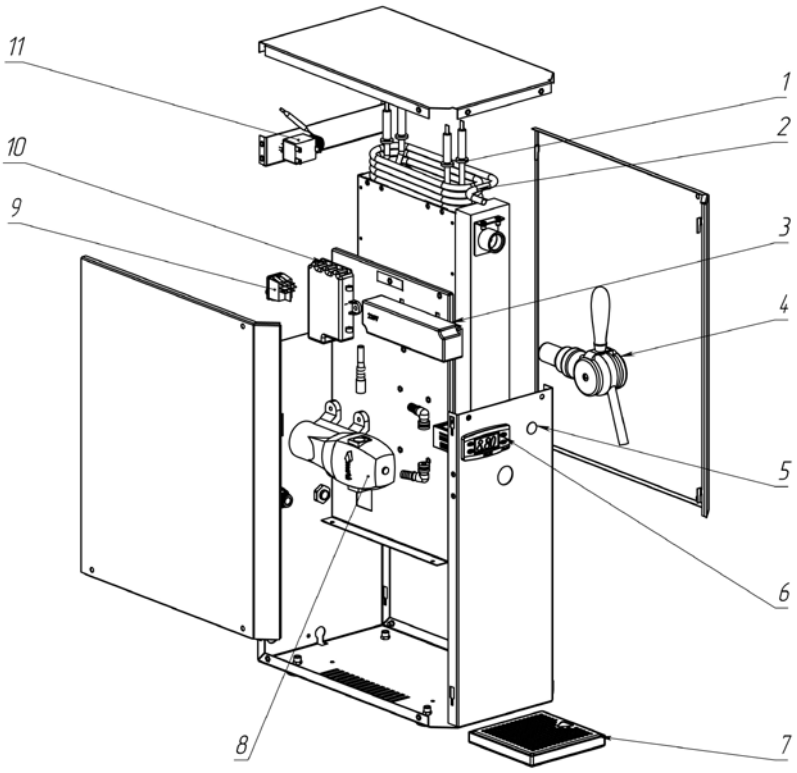

1. Tube electric heaters
2. Product line
3. Power supply
4. Tap
5. Green lamp.
6. Thermostat
7. Drip tray
8. Electric pump
9. Green Switch.
10. Terminal block
11. Protective thermostat

SPARE PARTS

Pos. No.	Part No.	Specification
4	ELIWEL EWPlus 961	Thermostat
5	C-35 UL	Green lamp
6	Tap, model “Round” 5/8, chrome	Tap
8	PROLUM™ Power Supply 24V, 60W, 2.5A, Series “RX” or "Mean well" LPV-60-24, 24V, 60W, 2.5A.	Power supply
9	RLFP222702V (24VDC) FLOJET	Electric pump
10	OK650NY KORNER	Terminal block
11	Arcolectric C6053AL Green 125V 20A UL CSA 20A 277Vac 250Vac	Green switch.
12	Tecasa SP-021 TS/17 240/400BV, (16A (95°C))	Protective thermostat

APPENDIX A: ELECTRICAL DIAGRAM (TYPE E+F (CEE 7/7))

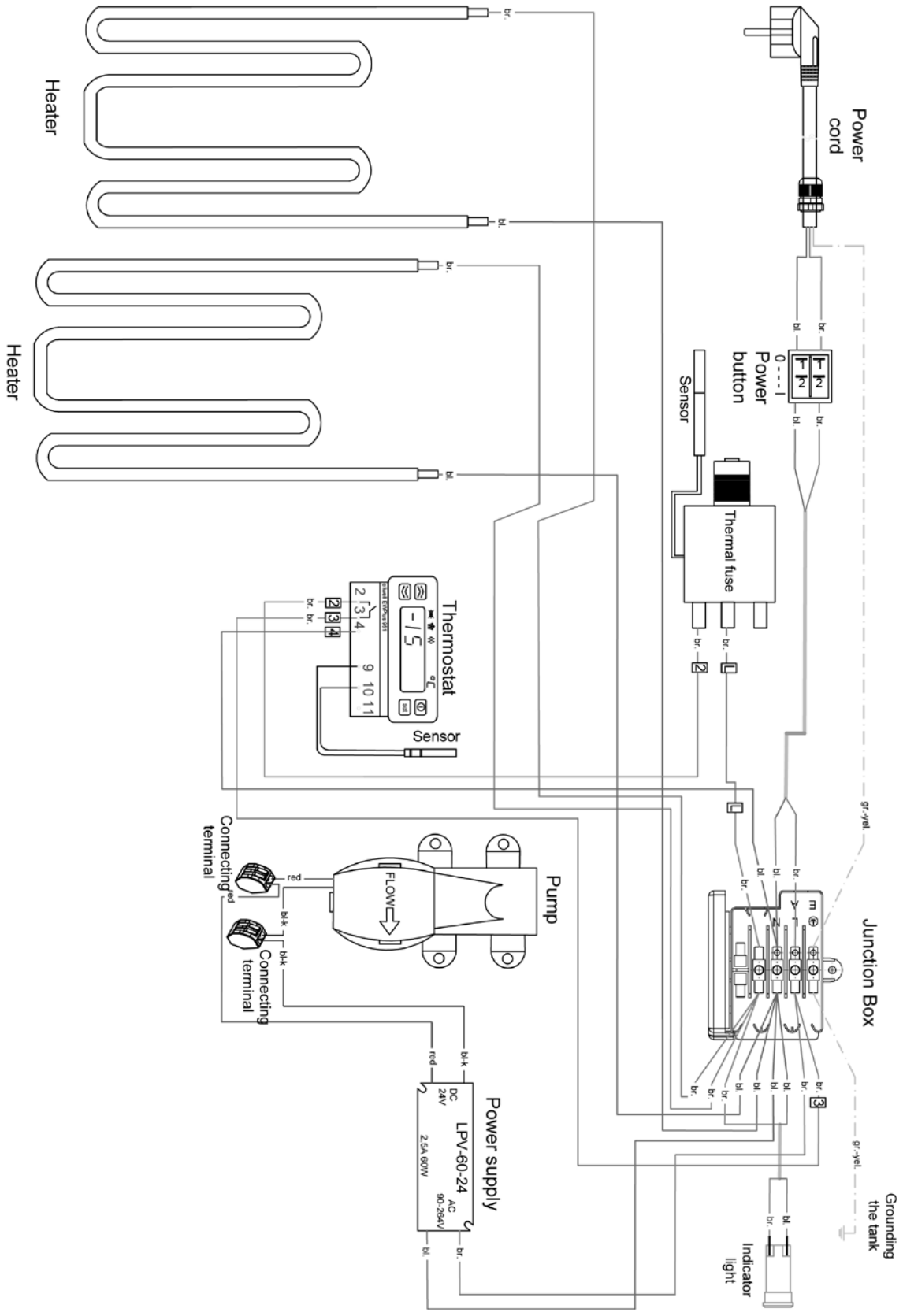

APPENDIX B: ELECTRICAL DIAGRAM (BS 1363)

