Installation Manual

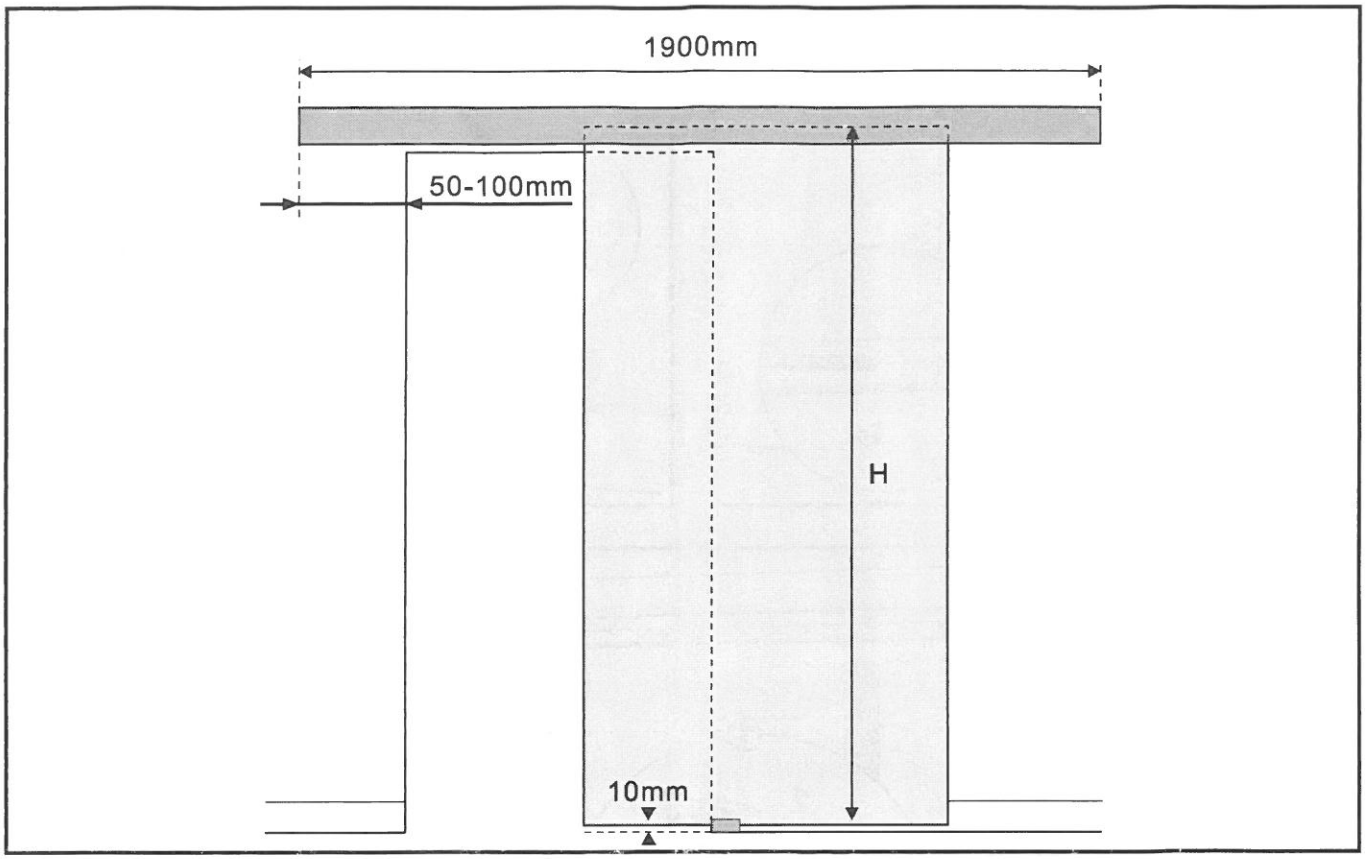

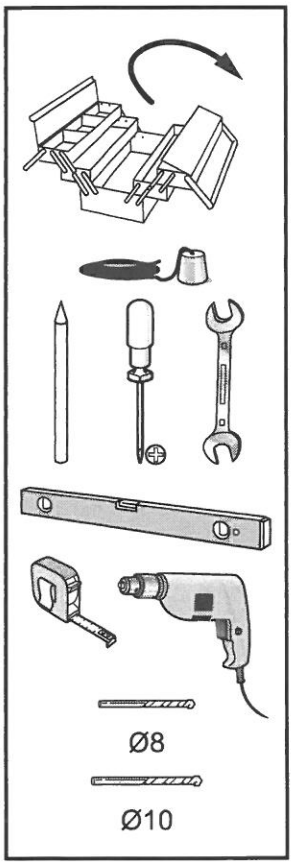

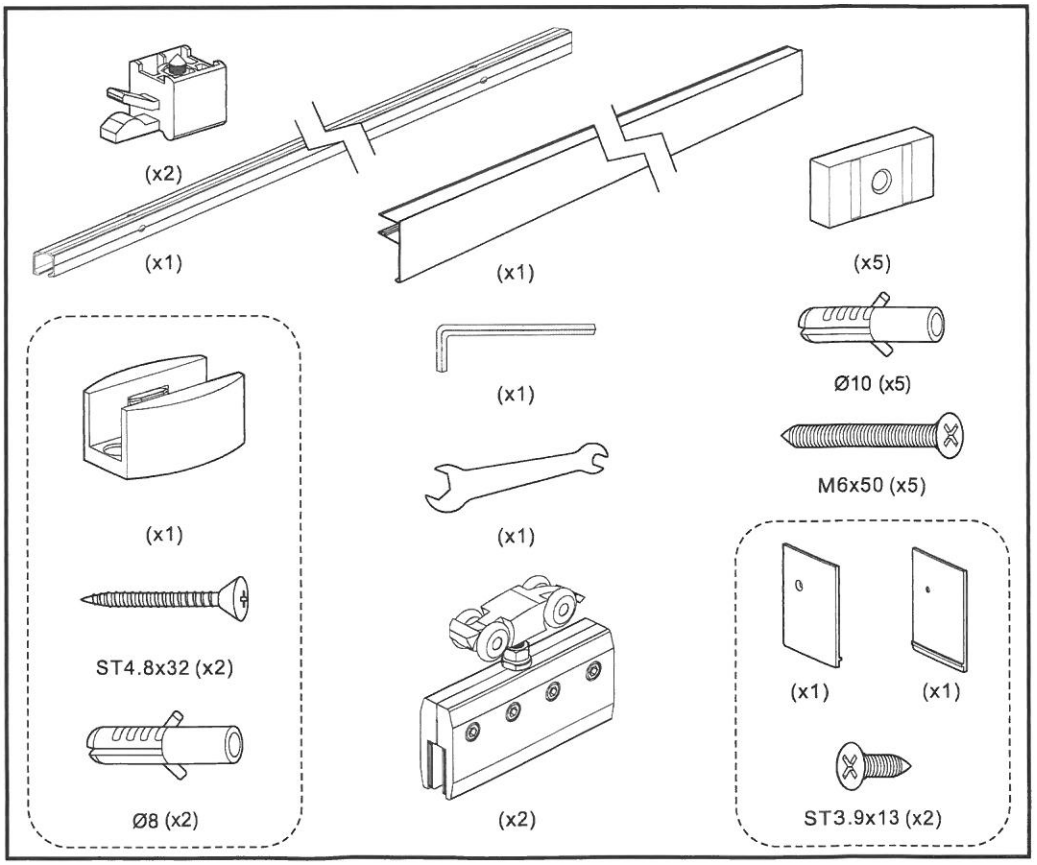

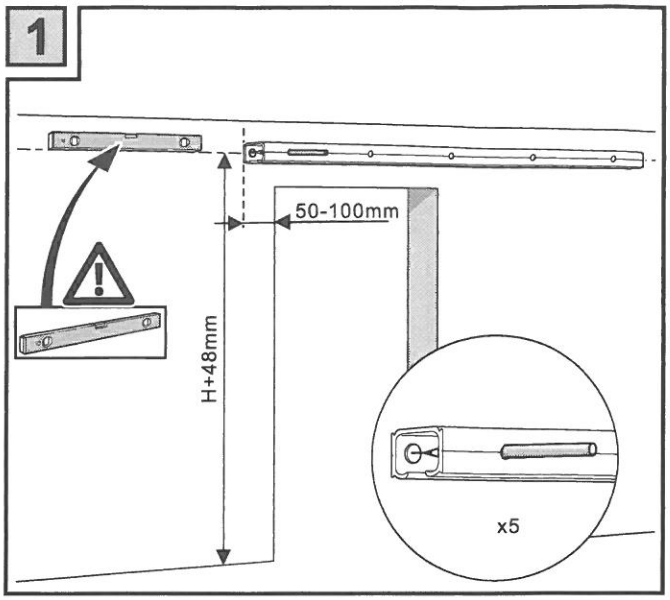
1
50-100mm
H+48mm
x5

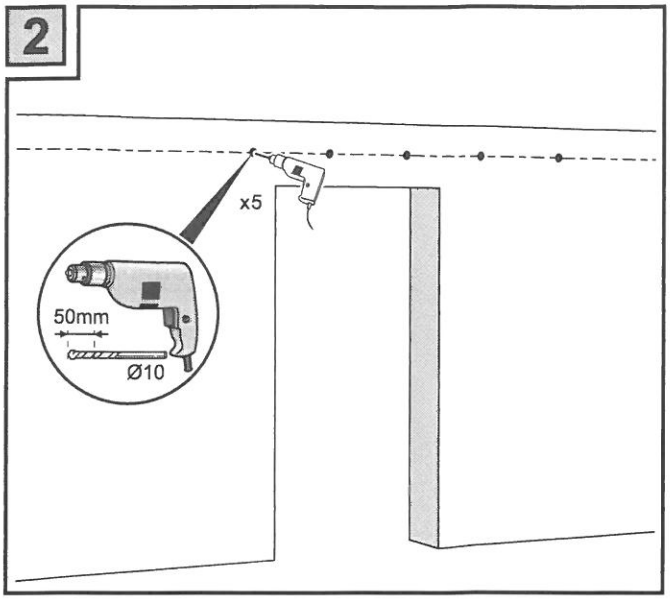
2
x5
50mm
Ø10

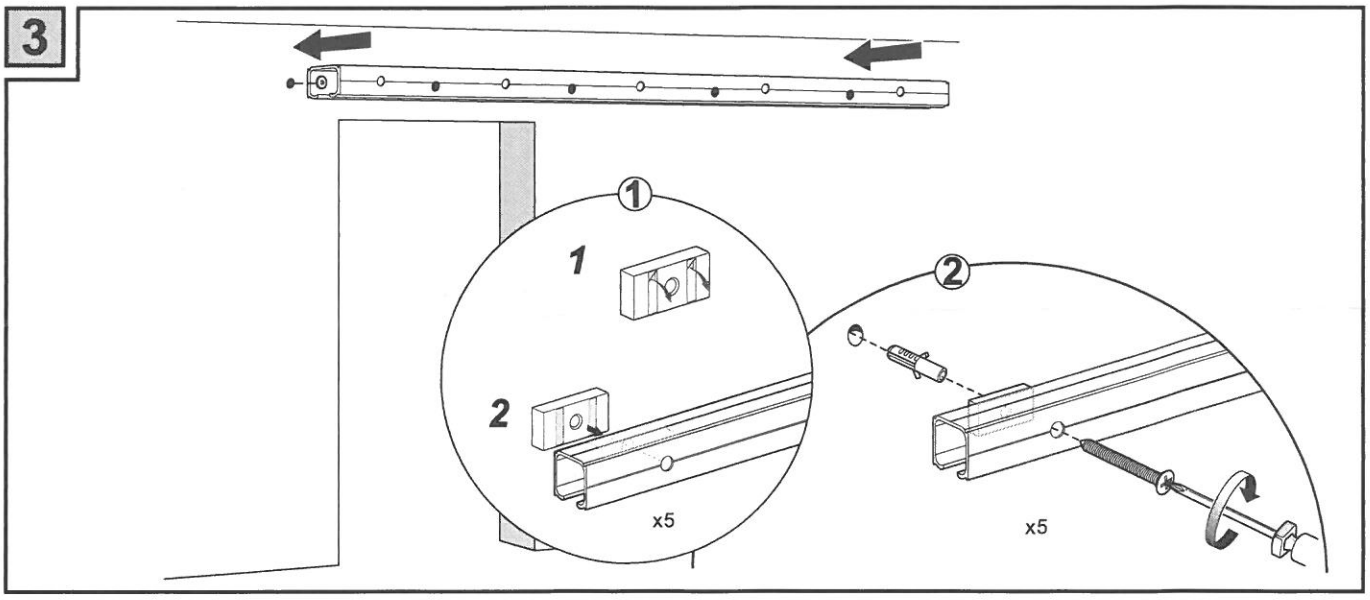
3
1
1
2
x5
2
x5

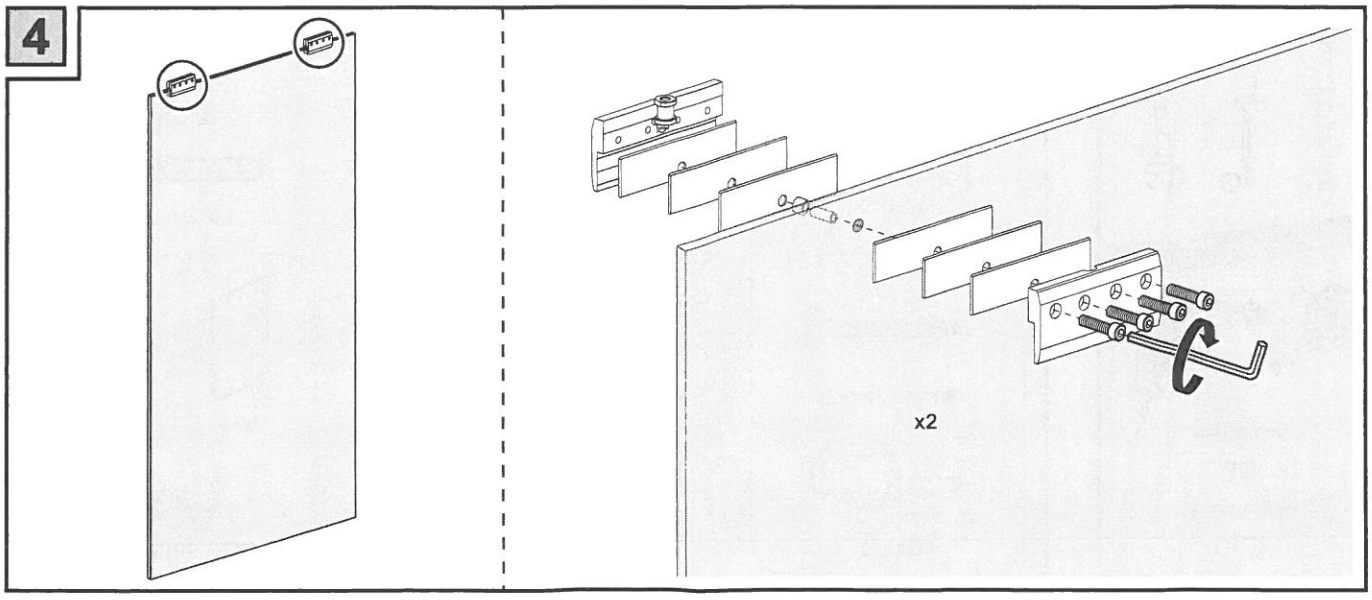
4
x2

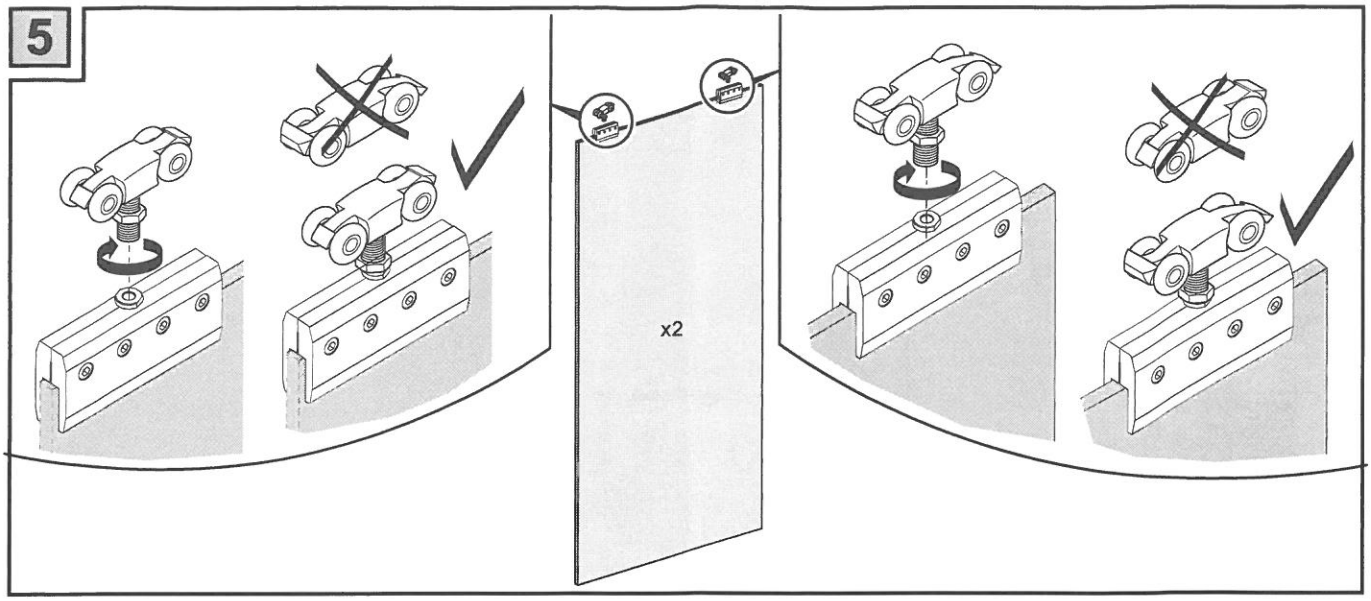
5
x2

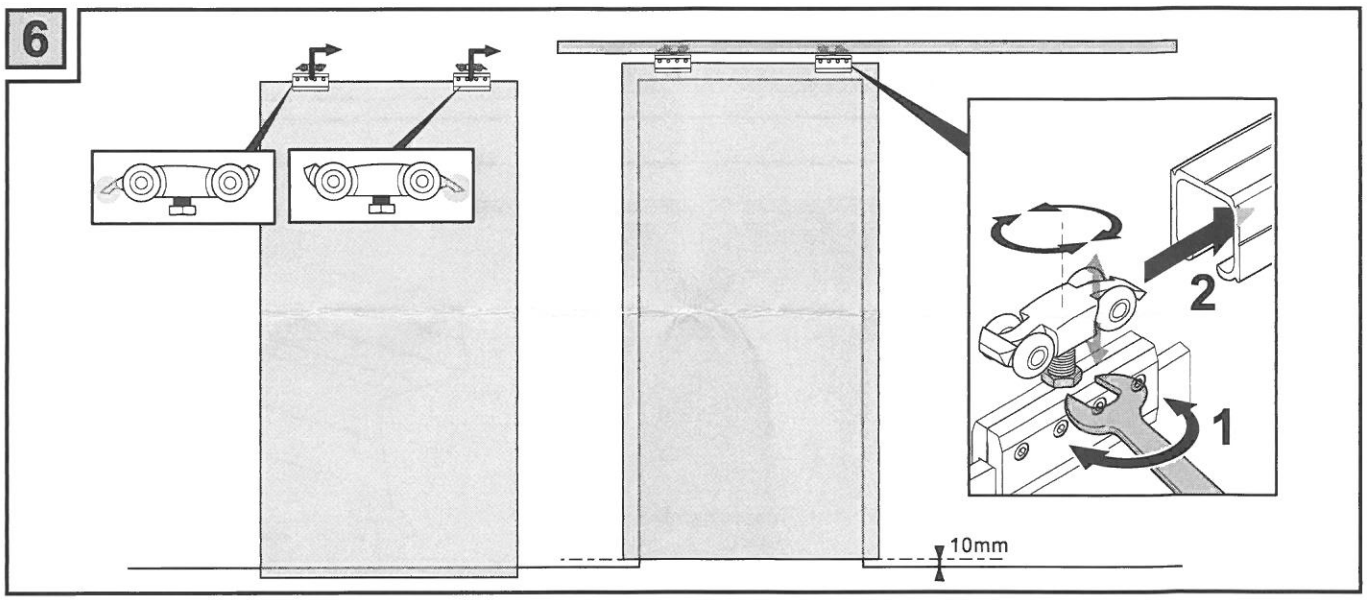
6
2
1
10mm

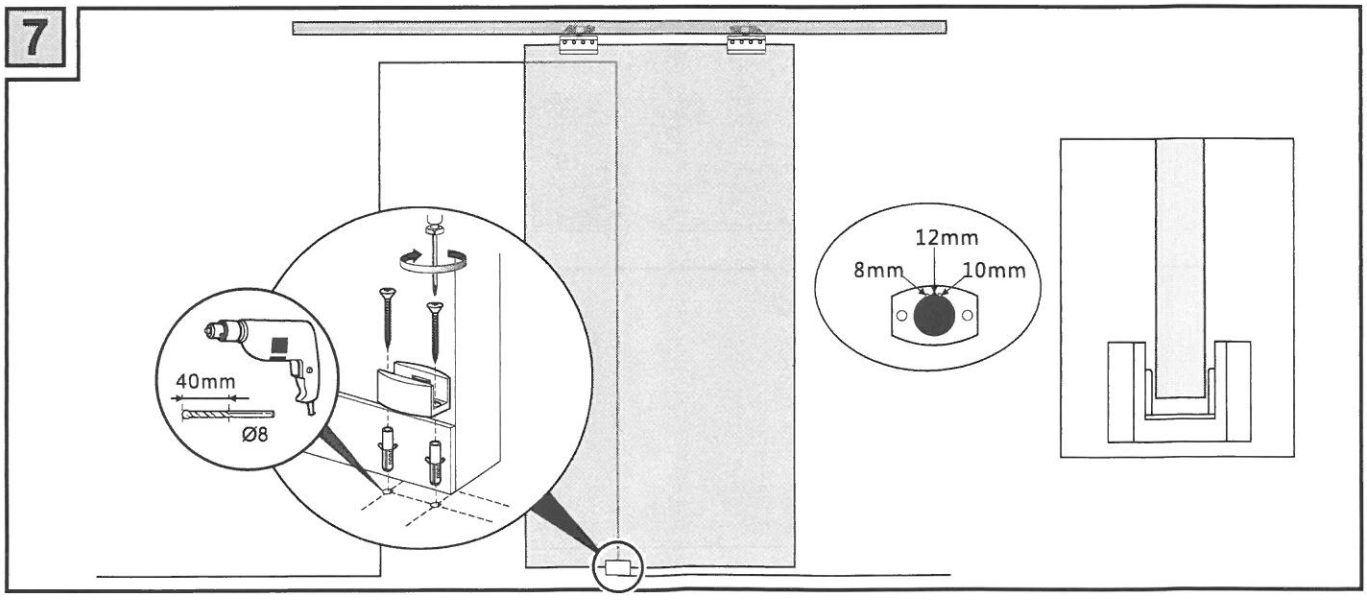
7
40mm
Ø8
12mm
8mm
10mm

8

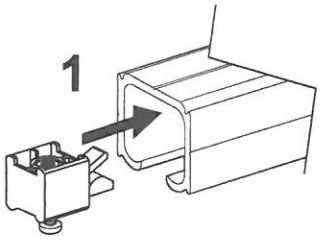

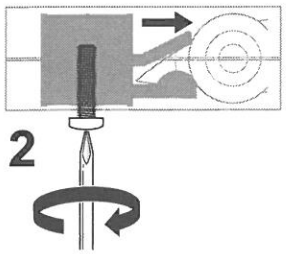

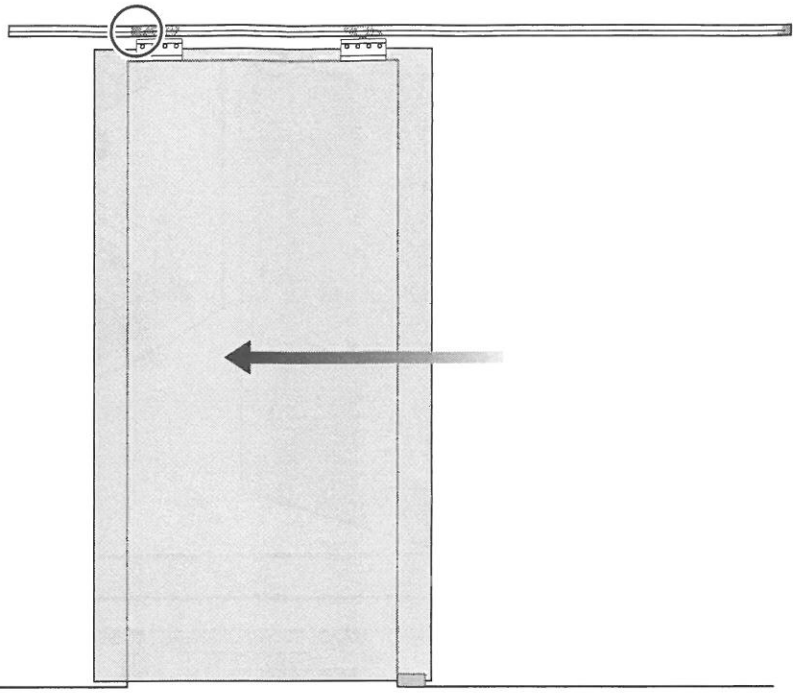

9

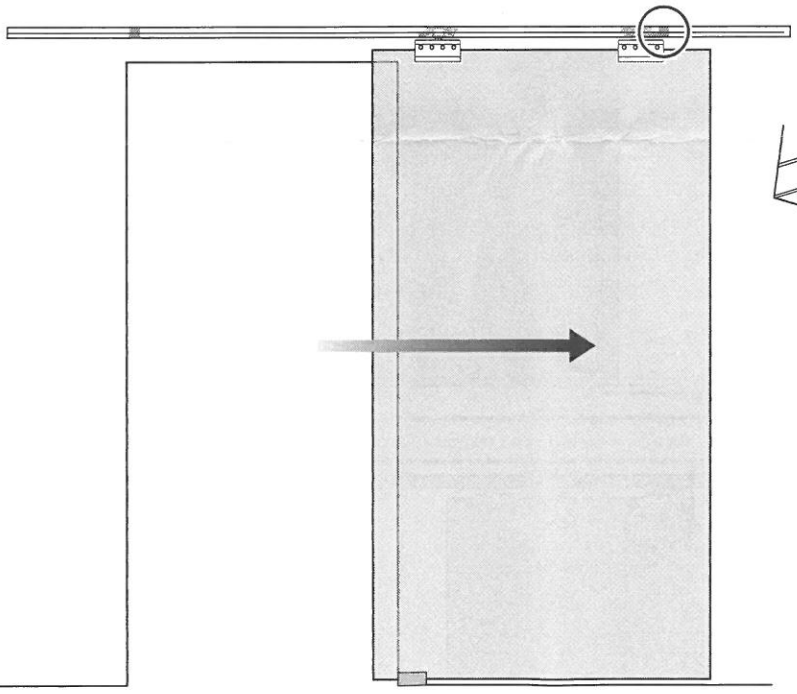

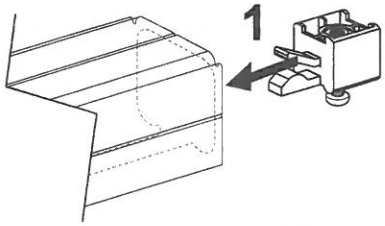

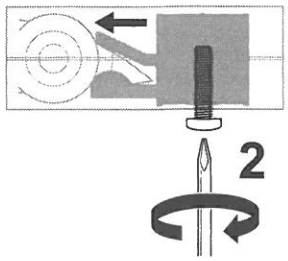

10

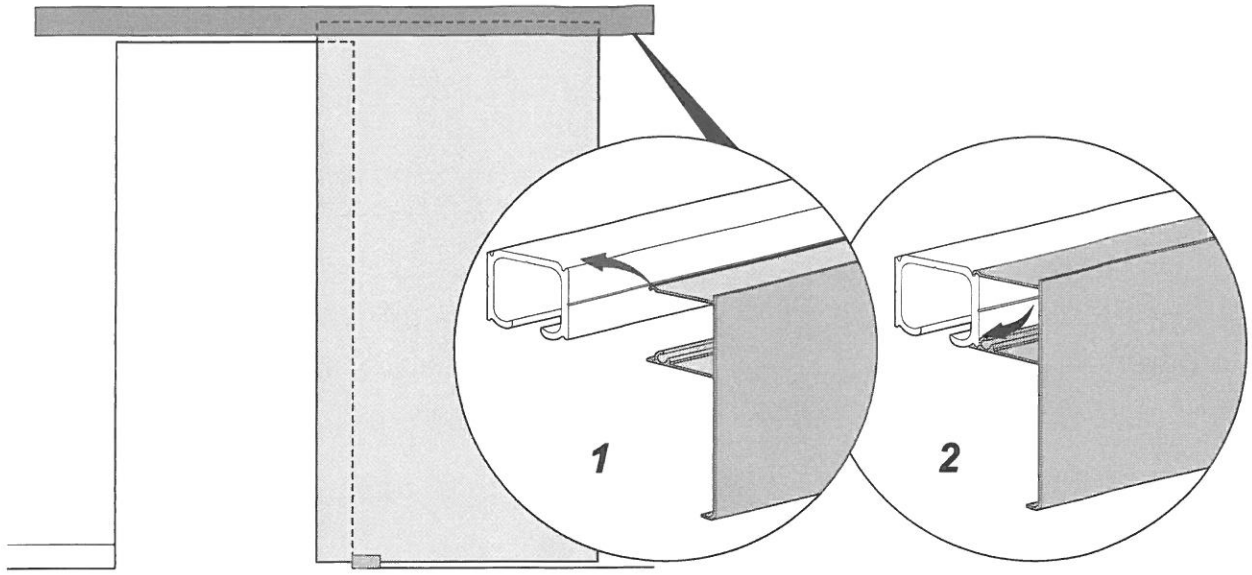

11

